

Joint Meeting of the MNAA and MPC Operations, Engineering & Strategic Planning ("Operations") Committees

March 12, 2025

BNA

Call to Order

March 12, 2025

Public Comment

Tennessee Code Annotated, Title 8, Chapter 44, Part 1

MNAA Policy ID: 33-007, Public Comment Policy, effective November 27, 2024

No Public Comment Requests Received by Monday, March 10, 2025, 9:00 am

Approval of Minutes

Joint Meeting of the MNAA and MPC Operations, Engineering & Strategic Planning Committees

February 12, 2025

Chair’s Report

Jimmy Granbery

Operations Committee Chair

Items for Approval

March 12, 2025

- Component Guaranteed Maximum Price #3 (CGMP3) for the Baggage Handling System (BHS)
- Construction Contract for Part 139 Runway Safety Area (RSA) Improvements for Runway 20L
- Task Order for Terminal Apron Reconstruction

Items for Approval

Robert Ramsey, PE, A.A.E., IAP
EVP & Chief Development Officer

Component Guaranteed Maximum Price #3 (CGMP 3) for the Baggage Handling System (BHS)

Project Description: Expand the outbound baggage handling system to increase capacity and meet future enplanement projections; CGMP3 consists primarily of construction of the baggage handling system.

Contractor: Messer Construction

Contract Cost:

CGMP 1 (Design)	$ 8,773,255
CGMP 2 (Facilities Construction)	$ 89,004,220
CGMP 3 (BHS Construction)	$130,005,000 NTE
GMP	$227,882,475

Schedule: Contract Start December 2022
Contract End December 2028

SMWBE Commitment: 4.94% MBE and/or WBE

Funding Sources:



MNAA - 100%



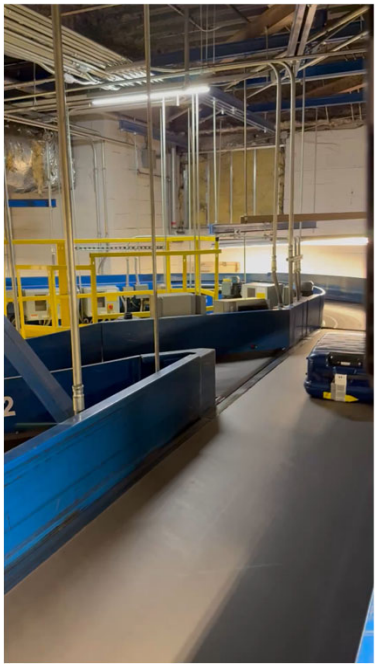

Staff Recommendation: Operations Committee recommend to the Board of Commissioners that it authorize the Chair and President & CEO to execute CGMP3 for baggage handling system related to the BHS Expansion contract with Messer Construction for $130,005,000 NTE and a GMP of $227,882,475.

Construction Contract for Part 139 Runway Safety Area Improvements R/W 20L

Project Description: Improvements to the extended Runway Safety Areas (RSAs) of Runway (R/W) 20L (North end of R/W 2R/20L), to fully comply with BNA grading standards for runway safety areas. This includes the grading work in the safety area, as well as stabilization of slopes past the runway safety area boundary.

Contractor: Civil Constructors, LLC.

Total Contract Cost: $777,470

Schedule: Contract Start: April 1, 2025
Contract End : April 30, 2025

SMWBE: MNAA Goal – 7.18% MBE and/or WBE
Civil Commitment – 9.96% MBE and/or WBE

Funding Sources:





Staff Recommendation: Operations Committee recommend to the Board of Commissioners that it authorize the Chair and President and CEO to execute the proposed contract with Civil Constructors, LLC. in the amount of $777,470.

Task Order for Terminal Ramp Reconstruction

Project Description: Full reconstruction of 12,750 SY of Terminal Apron pavement with 17” of FAA-specified P-501 concrete.

Contractor: Hi-Way Paving, Inc.

Total Task Order Cost: $6,200,000 NTE
($6.4M of $10M NTE committed)

Schedule: Contract Start: April 2025
Contract End : August 2025

SMWBE: 11.36% MBE and/or WBE
(On-Call Contract Participation Goal)

Funding Sources:



100% MNAA

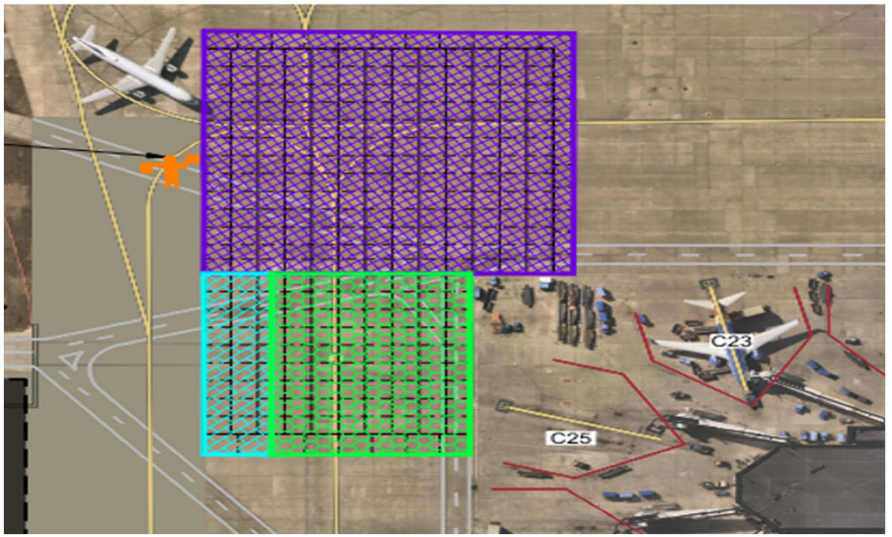

Phase 1A Phase 1B Phase 2

Staff Recommendation: Operations Committee recommend to the Board of Commissioners that it authorize the Chair and President and CEO to execute the proposed Task Order with Hi-Way Paving, Inc. in an amount Not-to-Exceed $6,200,000.

- Contract for LiDAR (Light Detection & Ranging) for Apron Intrusion Detection

Item for Approval

Brian Findlen

AVP, Chief of Police, DPS

Contract for LiDAR (Light Detection & Ranging) for Apron Intrusion Detection

Project Description: Purchase LiDAR solution to replace existing perimeter intrusion detection system on the apron

Contractors: The InDoor Lab, LLC & Simino Electric, LLC

Project Cost:

Year 1: Software/Installation/Equipment	$1,300,000
– InDoor Lab: $572,100	
– Simino: $298,249 (on-call contract)	
– MNAA IT & Engineering: $429,652	
Year 2: Software/Maintenance	$ 203,169
Year 3: Software/Maintenance	$ 211,464
Year 4: Software/Maintenance	$ 220,174
Year 5: Software/Maintenance	$ 229,319
Project Total (Not to Exceed)	$2,164,126

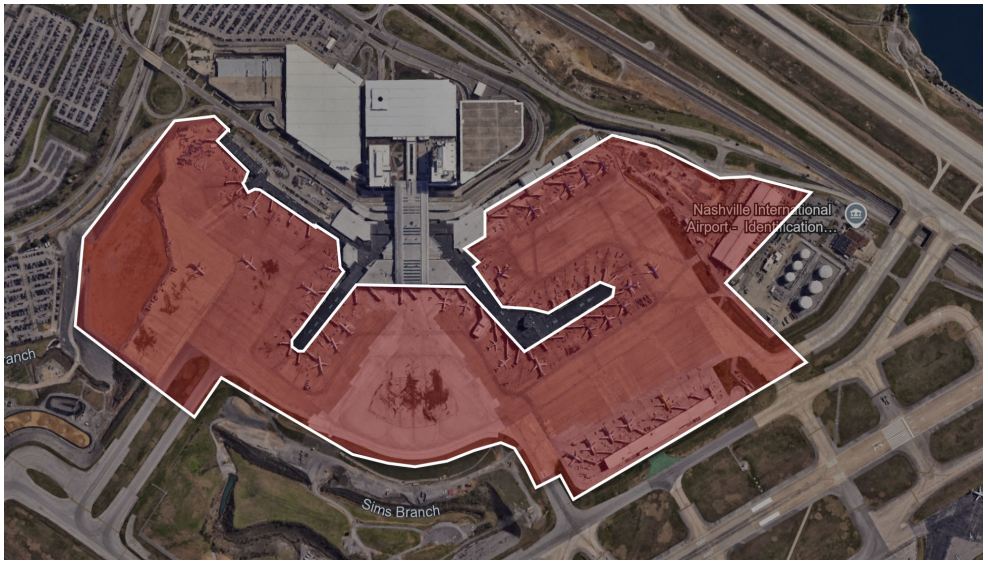

Schedule: Anticipated Start: May 2025
Contract Term: 5 years

SMWBE: Race and gender neutral



Funding Source: Year 1: $1,300,000: MNAA Airline Investment Fund (approved in FY24 CIP)
Year 2-5: $864,126: MNAA O&M

Staff Recommendation: Operations Committee recommend to the Board of Commissioners that it authorize the Chair and President & CEO to execute the contract with The InDoor Lab, Inc. for $1,436,226 for the LiDAR Apron Intrusion Detection ($2,164,126 total project cost).

Information Items

March 12, 2025

- Central Ramp Expansion Update
- Taxiway Design Group 6 Update
- BNA Development Update
- JWN Development Update

Information Items

Douglas E. Kreulen, A.A.E.
President and CEO

NEW HORIZON I (AIRSIDE) COST SUMMARY		
	Budget	Project Contingency (~10%)
Baggage Handling System Improvements	$ 243,000,000	$ 22,090,909
Concourse D Extension	$ 287,000,000	$ 26,138,432
Concourse A Reconstruction	$ 855,000,000	$ 77,939,456
Central Ramp Expansion	$ 156,000,000	$ 14,181,818
ART (~ 0.4%)	$ 4,000,000	$ -
PROGRAM CONTINGENCY (~5%)	$ 75,000,000	$ -
NEW HORIZON I TOTAL	$ 1,620,000,000	$ 140,350,615

Total Contingency = $75M program + $140M project ~ $215M

Central Ramp Expansion Update

- Board of Commissioners approved New Horizon I (airside) program scope & budget on Aug 21, 2024
- Central Ramp Expansion was estimated at $156M
- Board of Commissioners approved award of Progressive Design Build project to Kiewit Infrastructure South Co. and CGMP1 for $28.8M on Aug 21, 2024
  - CGMP 1: $28,821,386 (Pre-construction – 8/24)
  - CGMP 2: $20,600,000 (Enabling – 2/25)
  - CGMP 3: Fill & Drainage Infrastructure – 5/25
  - CGMP 4: Apron Paving – 7/25

Costs	Budget (8/24)	60% Cost Estimate
Design/Construction	$ 130,886,833	$ 228,665,338
MNAA Soft Cost	$ 10,931,349	$ 10,931,359
Project Contingency[1]	$ 14,181,818	$ 0
Project Cost	**$ 156,000,000**	**$ 239,596,697**
Max Incentive[2]		$ 4,500,000
Total Project Cost	**$ 156,000,000**	**$ 244,096,697**
Budget Variance		**$ 88,096,697**

[1] *$7.5M in owner contingency in CGMP1*
[2] *Contractual completion date = September 30, 2027*
$1.5M incentive if complete by August 30, 2027
$4.5M incentive if complete 60 days early or August 1, 2027

Central Ramp: Independent 60% Cost Estimate

- Independent Cost Estimator (HDR) validated Kiewit 60% estimate - Feb 26, 2025

Central Ramp: Factors Driving Budget Variance

Factor	Variance	Reason
Drainage	+$35,000,000	• Very little drainage provided in conceptual budget • Support of excavation, rock excavation, temporary drainage, slotted drainages
Fill Material Volume Increase/Cost	+$25,000,000	• Quantity increased from 900K to 1.1M CY • Market increase from $35 to $51/CY
Concrete Cost	+$4,000,000	• Market increase from $125/SY to $200/SY
Taxiway T4 / Lima/ Taxilane G3	+$9,000,000	• ADG V / TDG 6 Route additional $9M
Taxiway T3 / Lima	+$4,000,000	• Redundancy
Phasing	+$2,000,000	• Not evaluated at concept
Max Incentive	+$4,500,000	• Early Completion; Incentive added after conceptual budget
Contingency	+$4,600,000	• Based on Contractor Risk Evaluation
Budget Variance	**+$88,100,000**	

Budget	
Design/Construction/Soft Costs	$ 141,818,182
Project Contingency	$ 14,181,818
Conceptual Budget	$ 156,000,000
Revised Project Budget	$ 244,100,000
Budget Variance	**$ 88,100,000**
Funding for Budget Variance	
Concourse D Extension Project Savings	$ 40,000,000
Program Contingency ($48.1M of $75M)	$ 48,100,000
Total Funding for Budget Variance	**$ 88,100,000**
Updated Budget Variance	**$ 0**

Central Ramp: Funding for Budget Variance

- NOTE: Will be brought to the airlines for approval

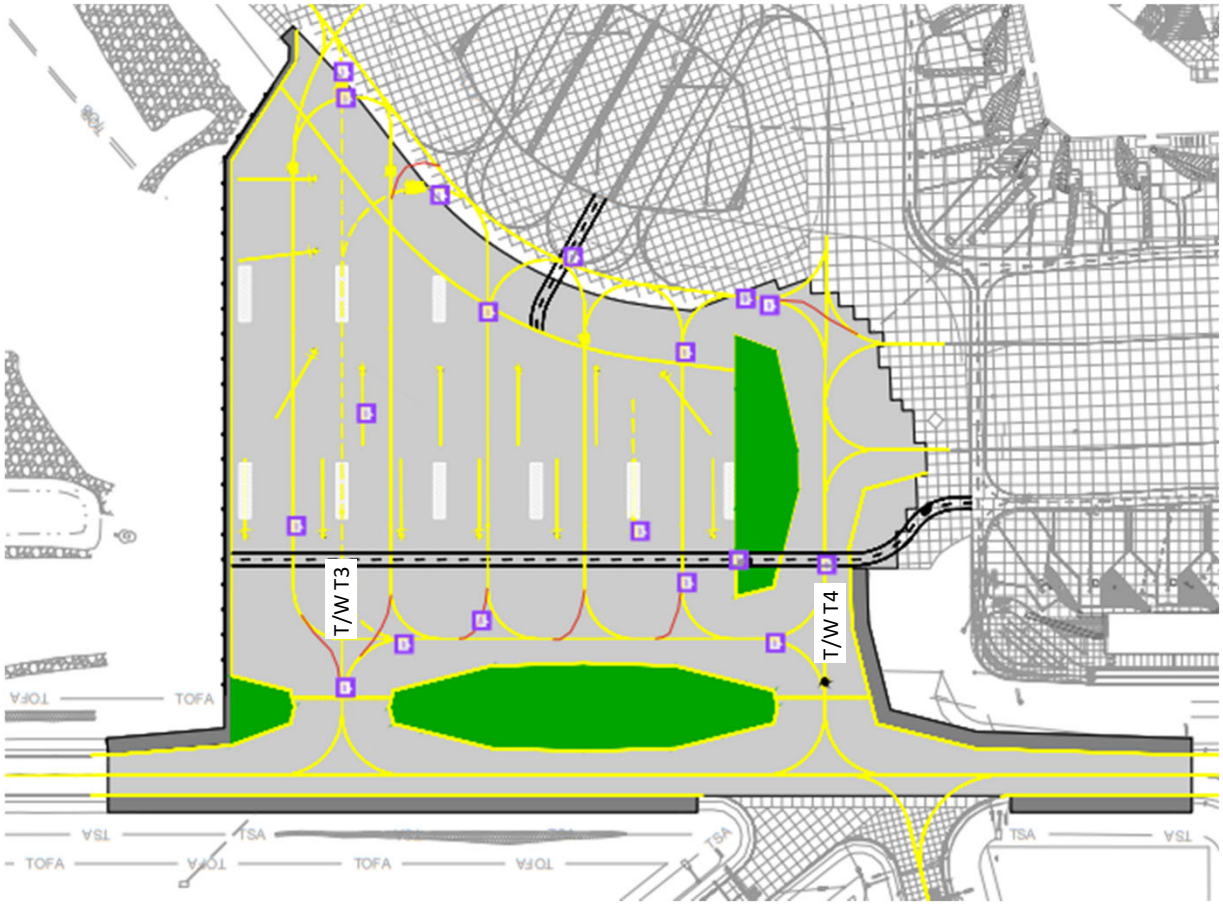

Central Ramp Design/Layout

- FAA created Taxiway Design Group (TDG) Standard in March 2022
  - Created six classifications for aircraft (1 smallest – 6 largest)
  - Based on: **A)** width of main gear; and **B)** the distance from the cockpit to the main gear
  - Widens taxiway turning radius (fillet) for larger aircraft
- Runways 2L/20R, 2R/20L and 13/31 are currently designed around the largest scheduled aircraft which are **Taxiway Design Group 5**
  - 787-8 (214 seats)
  - 777-200 (272 seats)
- International air service demand is strong enough to increase to larger **Taxiway Design Group 6** aircraft

Taxiway Design Group 6 Update

- Air service demand requires the airfield to be upgraded to accommodate larger aircraft
- Desire to upgrade to:
  - 787-10 (256 seats)
  - 777-300ER (297 seats)
  - Airbus 350-1000 (331 seats)

TDG 5

Boeing 787-8 (214 seats)

TDG 6

Boeing 777-300ER (297 seats)

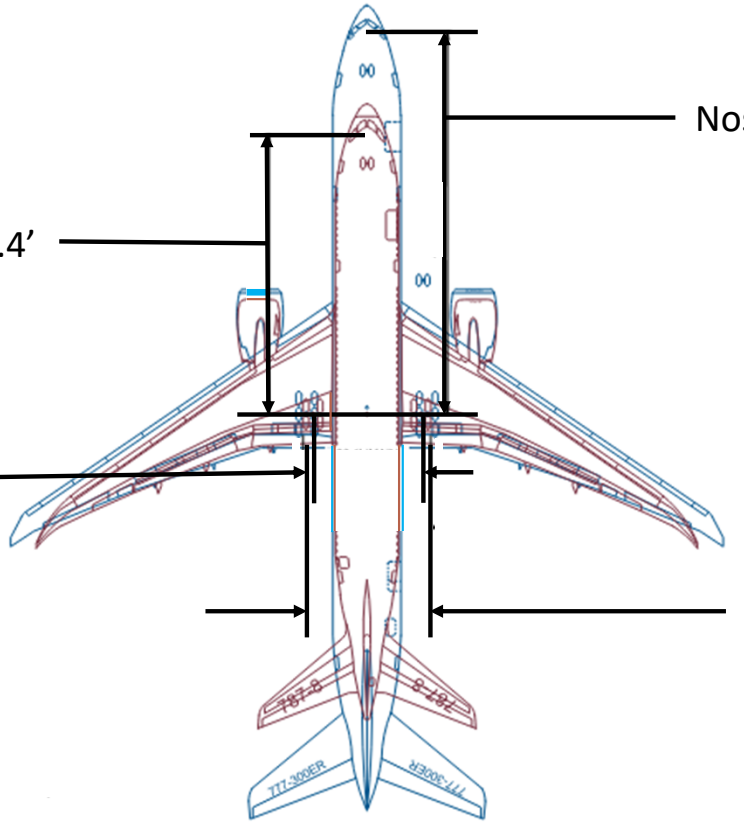

Taxiway Design Group (TDG) 5 to 6 Comparison – Overhead

TDG 5

Boeing 787-8 (214 seats)

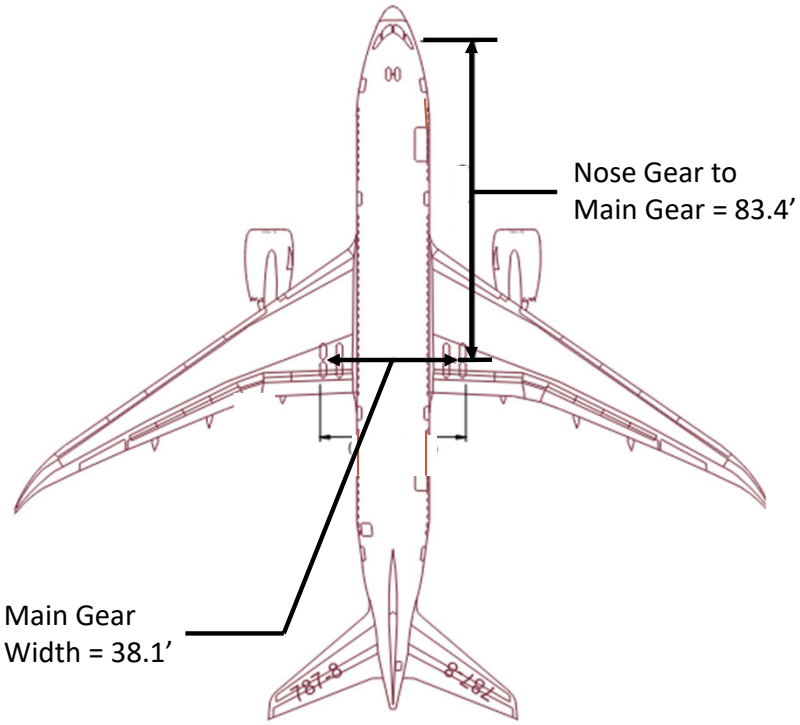

TDG 6

Boeing 777-300ER (297 seats)

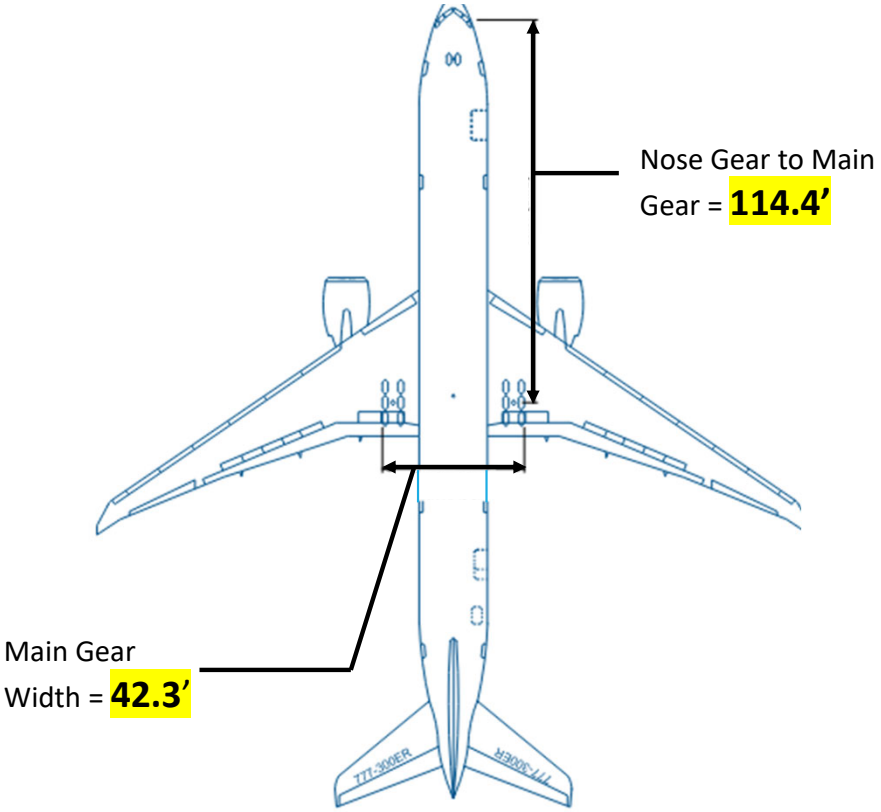

Taxiway Design Group (TDG) 5 to 6 Comparison – Side by Side

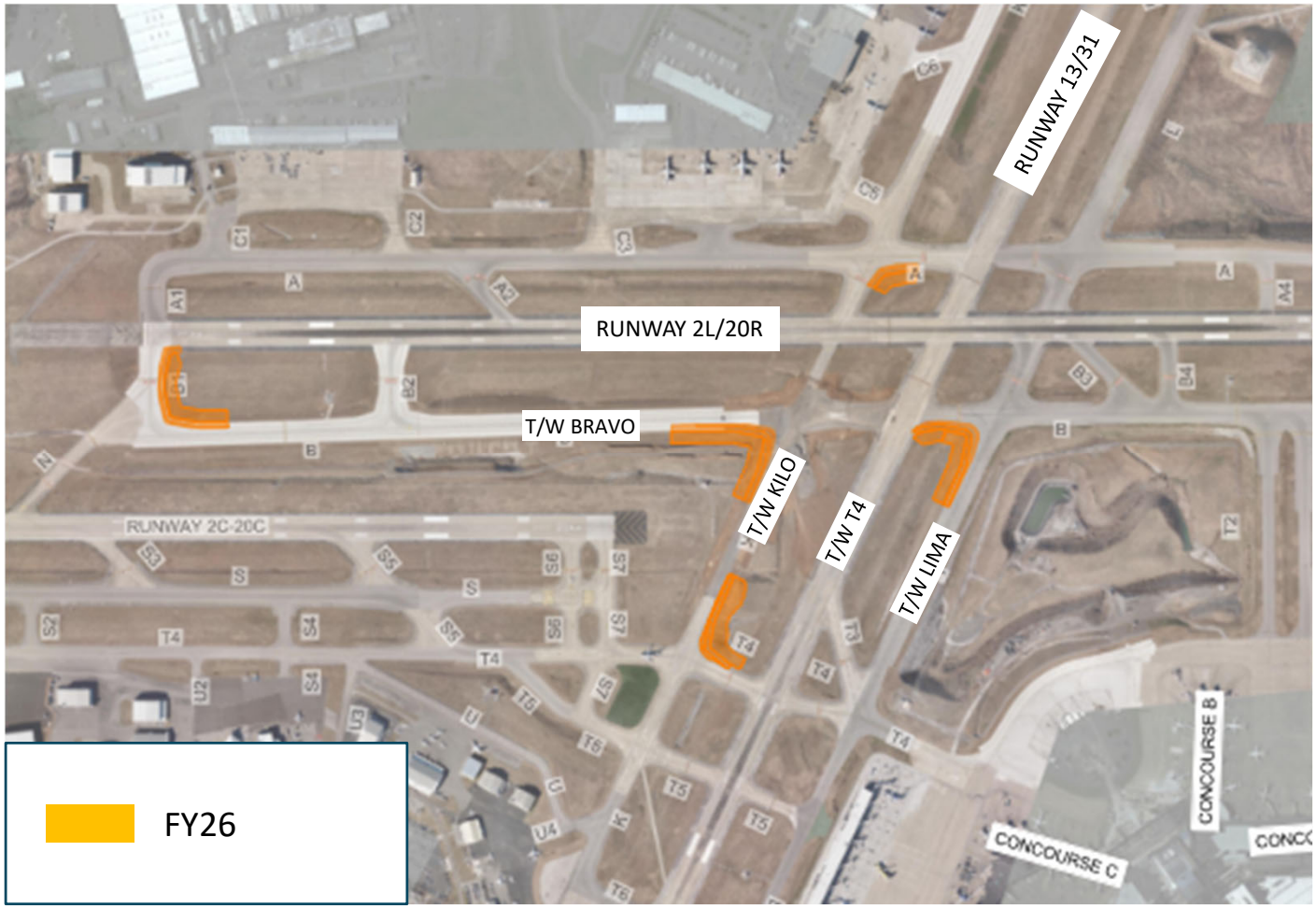

Taxiway Design Group 6 Initial Capability

- Fillet Widening:
  - T/W Bravo 1
  - T/W Bravo/Kilo
  - T/W Alpha Kilo
  - T/W Bravo/Lima
  - T/W Kilo/T4
- Cost = $14,000,000
  - FY25 CIP Amendment
- Operational - April 2026

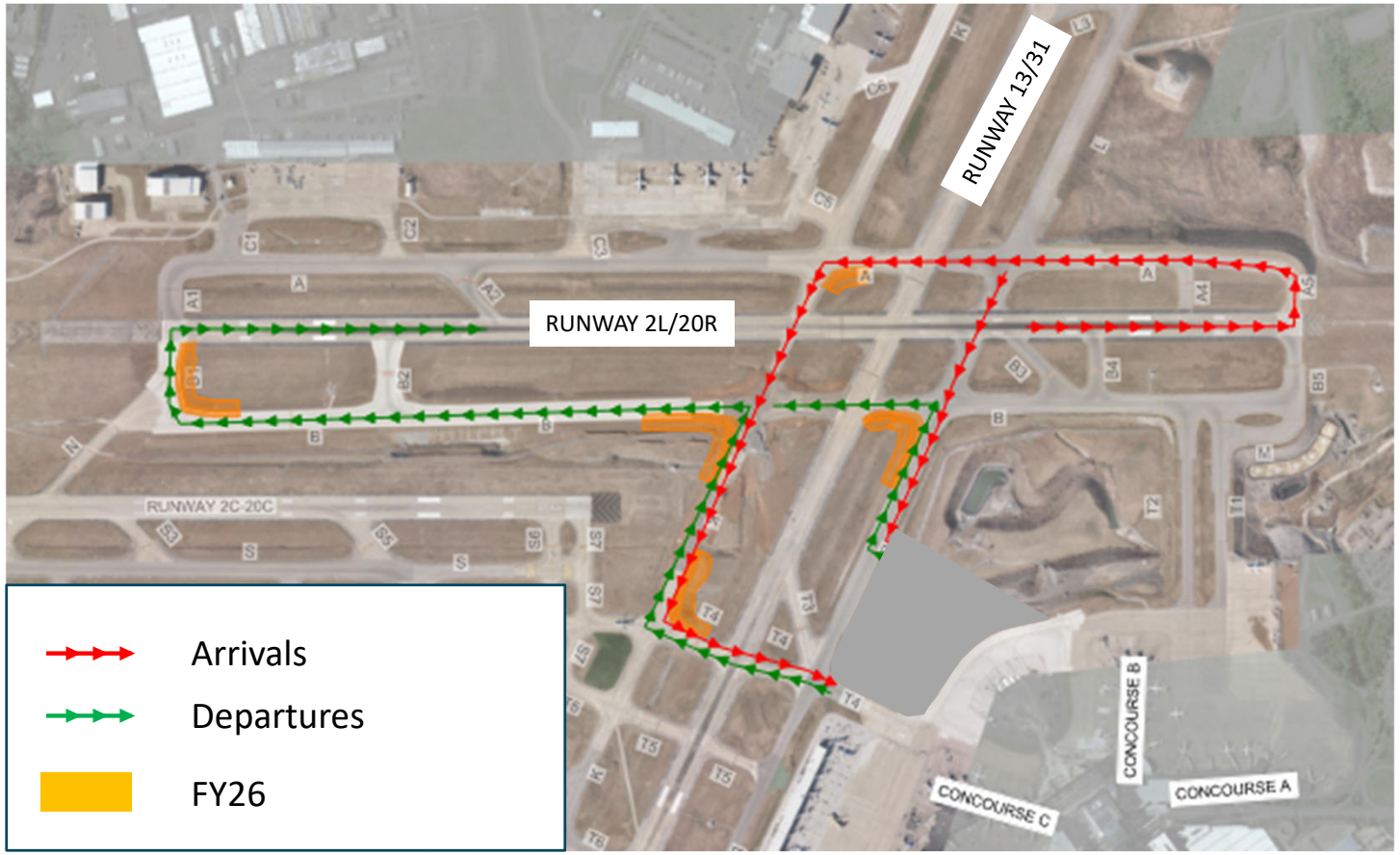

Runway 2L/20R North Flow

- Fillet Widening:
  - T/W Bravo 1
  - T/W Bravo/Kilo
  - T/W Alpha Kilo
  - T/W Bravo/Lima
  - T/W Kilo/T4

Note: T/W Kilo Route to be used until completion of T/W Lima in the Central Ramp Expansion (CRE) Project (tentative Q3 2026)

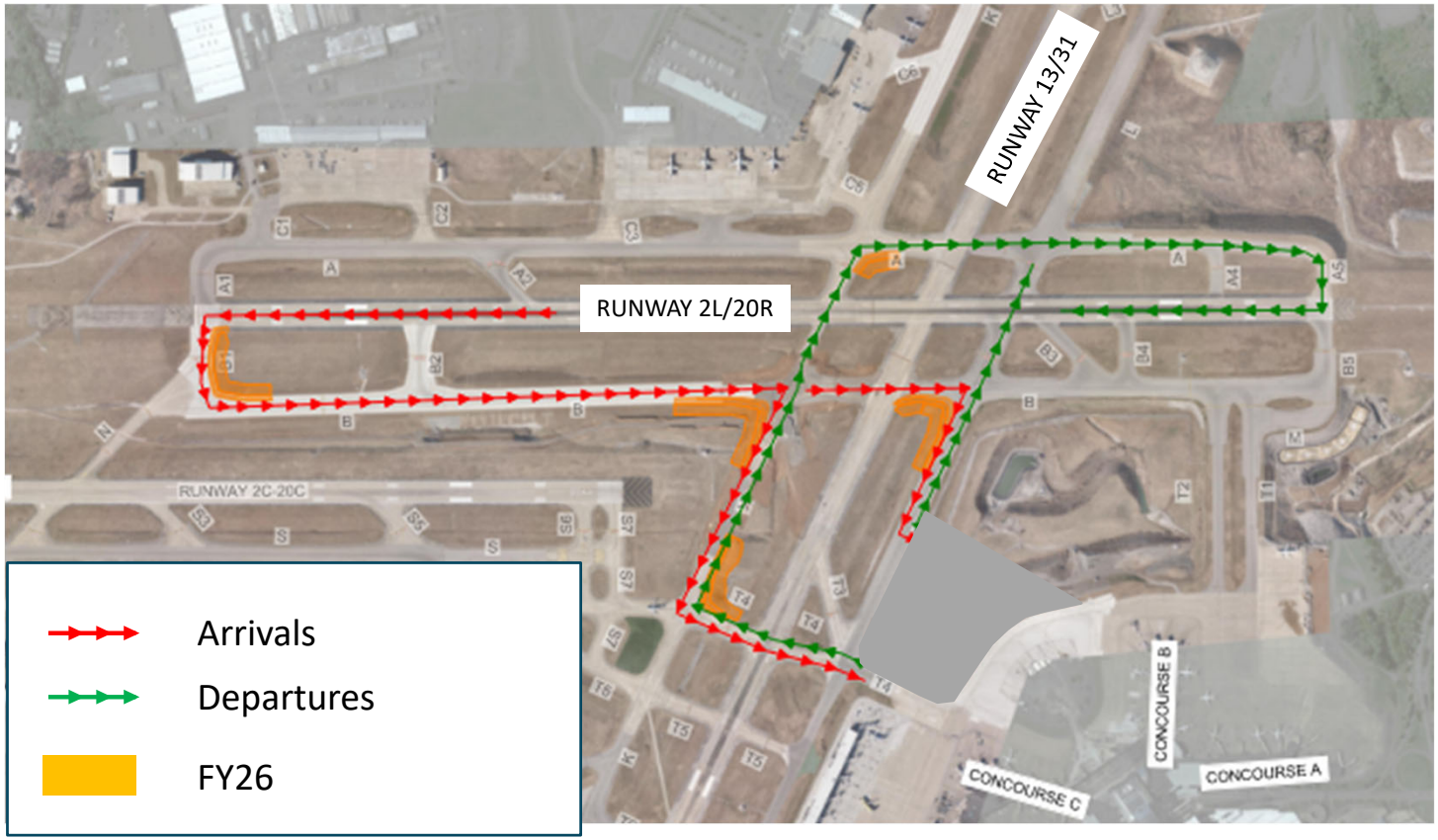

Runway 2L/20R South Flow

- Fillet Widening:
  - T/W Bravo 1
  - T/W Bravo/Kilo
  - T/W Alpha Kilo
  - T/W Bravo/Lima
  - T/W Kilo/T4

Note: T/W Kilo Route to be used until completion of T/W Lima in the Central Ramp Expansion (CRE) Project (tentative Q3 2026)

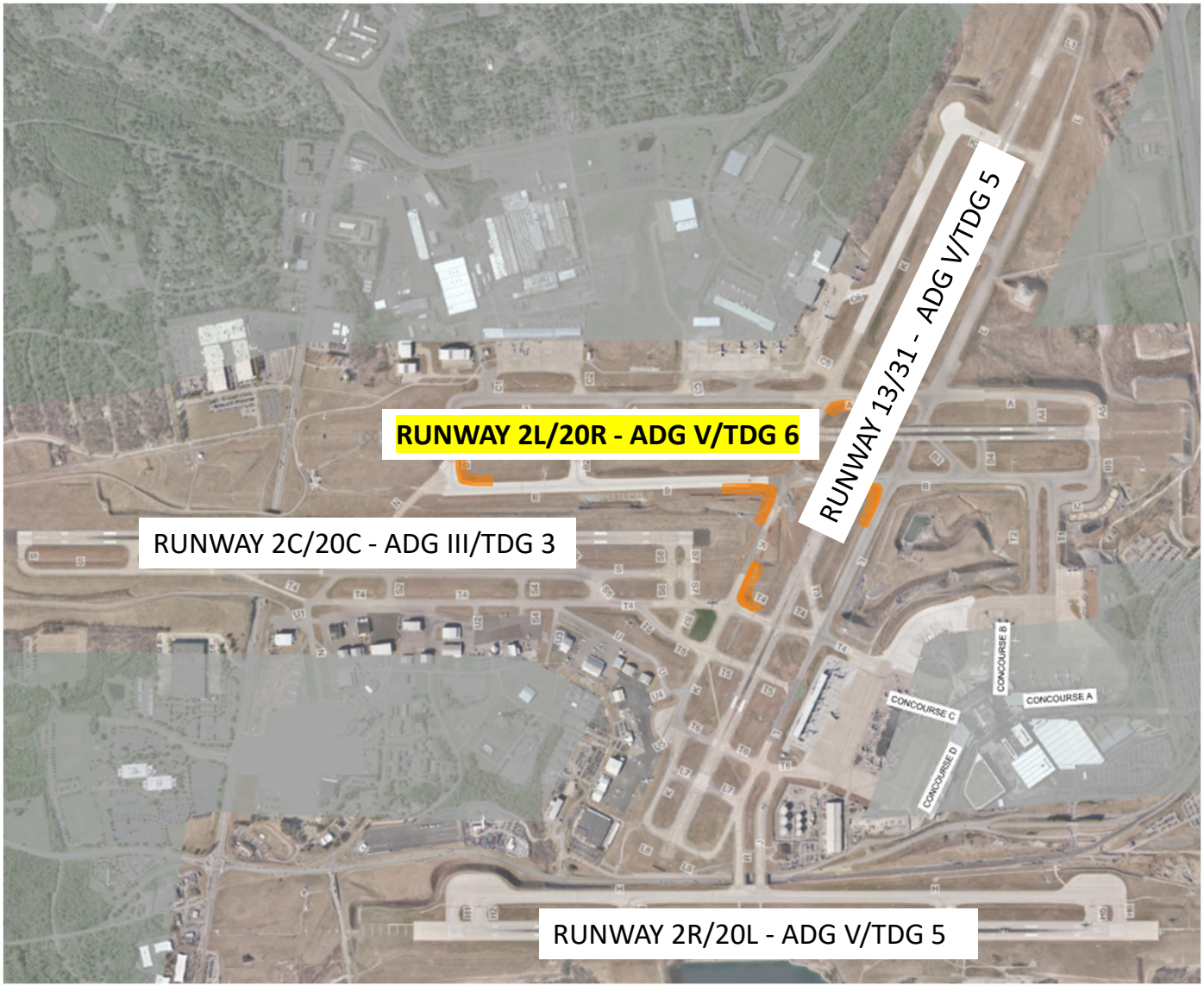

Runway Capability

Status as of: April 2026

- R/W 2L/20R – ADG V/TDG 6
- R/W 2C/20C – ADG III/TDG 3
- R/W 13/31 – ADG V/TDG 5
- R/W 2R/20L – ADG V/TDG 5







BNA Development Update

- Concourse D Extension – 112 days
  - Concessions turned over Mar 4, 2025
  - Taxilane Y1 Paving complete Apr 1, 2025
  - Opening event Jul 1, 2025
  - All gates operational Jul 8, 2025
- Terminal Access Roadway Improvements
  - Bridge demo complete Feb 2025
  - ITB responses due Mar 13, 2025 (Ph 3.1)
    - Board Approval April 2025
    - Construction start date dependent on TDOT (projected May 2025)
- Concourse A Ramp Paving
  - Phase 1.1 completion Apr 22, 2025
  - Substantial completion Jul 21, 2025

BNA New Horizon

JWN Development Update



North Development, February 28, 2025


Parcel 1, DN LLC, February 28, 2025


Parcel 10, MNPD, February 28, 2025

JWN John C. Tune Airport



Joint Meeting of the MNAA and MPC Operations, Engineering & Strategic Planning ("Operations") Committees

Meeting Adjourned